seeed studio

INDUSTRIAL PRODUCT DATASHEET

SenseCAP MeshTracker X1 for Meshtastic

Card-sized IP66 Meshtastic tracker with dual-band GPS, long-range LoRa communication, and up to 5-day battery for off-grid location sharing and messaging.

SKU	UPDATED	PRICE
100093876	2026-09-16 11:45:36	$49.90(Excl. VAT)

Overview

SenseCAP MeshTracker X1 for Meshtastic is a card-sized, IP66-rated off-grid communication and location-sharing device featuring dual-band L1+L5 GNSS with barometer, Semtech LR2021 LoRa connectivity, USB-C, vibration and sound alerts, and an 1100mAh battery with up to 5 days of runtime. It enables reliable long-range communication up to 8 km in open line-of-sight conditions at 915 MHz, designed for outdoor adventures, events, and emergency situations.

Key Features

A Meshtastic Device You'll Actually Carry

SenseCAP MeshTracker X1 is designed for people who need reliable communication and location sharing beyond cellular networks—whether in the outdoors, at large events, or during emergency situations. With a truly portable form factor and rugged IP66 protection, it brings Meshtastic connectivity into everyday carry and real field use.

- **Ultra-Precise Dual-Band GPS Tracking**

Powered by dual-band L1+L5 GNSS and a built-in barometer, MeshTracker X1 delivers more reliable positioning and altitude awareness than single-band GPS. It is also the world's first card-sized Meshtastic device with dual-band GPS.

- **Reliable Long-Range Communication**

Tested at 915 MHz, MeshTracker X1 enables reliable communication over distances of up to **8 km in open line-of-sight conditions**, keeping teams connected during outdoor adventures, events, and emergency situations.

- **Next-Generation LoRa Connectivity (LR2021)**

Powered by Semtech LR2021, MeshTracker X1 delivers stronger RF performance with up to **-141 dBm sensitivity** and **2.6 Mbps FLRC data rates** for faster, more reliable mesh communication, creating a foundation for future features like voice and image transmission.

- **Card-Sized Design, Easy to Carry**

Slim and lightweight, MeshTracker X1 is designed for everyday carry during outdoor adventures. Wear it on a lanyard, attach it to a backpack, secure it to a bike bag, or simply slip it into your pocket for effortless off-grid connectivity.

- **Flexible Vibration & Sound Alerts**

MeshTracker X1 provides flexible notification options with built-in vibration and buzzer feedback. Stay aware of incoming messages whether you're in a noisy event, riding outdoors, or exploring quiet trails where you prefer minimal distractions.

- **IP66 Rugged Outdoor Protection**

Built with IP66-rated protection against dust and water, ensuring reliable performance in harsh outdoor environments such as rain, mud, and dusty trails.

- **USB-C Connectivity**

Standard USB-C interface for charging, firmware updates, and debugging, designed for rugged outdoor use and everyday convenience.

- **Extended Battery Life**

A highly integrated, card-sized form factor optimized around a high-capacity 1100mAh battery, delivering up to 5 days of runtime while remaining compact and portable for outdoor carry and off-grid communication.

Product Gallery

Specification

Main Controller	Nordic nRF52840	
LoRa	Semtech LR2021	Frequency Range: 863–928 MHz MAX TX Power: 22 dBm
Wireless	Bluetooth (v5.0)	
LED	1 × RGB	
Buzzer	1 × buzzer to indicate status	
Button	1 × button to operate	
Vibration	1 × DRV2605L	
Sensor	Air Pressure	Range: 300–1100 hPa Accuracy: ±0.06 hPa Resolution: 0.06 Pa
	Temperature (Read from barometer)	Range: −40–85°C Resolution: 0.0006°C
	* IMU + Magnetometer	* Not available in this model Available on NEW SKU currently in development.
Battery	Battery Capacity	Rechargeable high-voltage battery, 1100 mAh
	Battery Life Monitoring	Periodic uplink battery level
	Charging Protocol	[NEW] USB Type-C charging
	Power Input	Device: 5 V, 0.55 A Battery: 4.4 V, 0.22A
	Fully-charged cut-off voltage	4.37V
	Charging Temperature Limit	5 to +45℃
Antenna	Internal (GNSS/863-928MHz LoRa/Bluetooth)	
Communication Distance	Up to 8 km	
IP Rating	[NEW] IP66	
Dimensions	90 × 57 × 8 mm	
Device Weight	45 g	
Operating Temperature	−20 to 60℃	
Certification	CE/FCC/RoHS/TELEC	

Hardware Overview

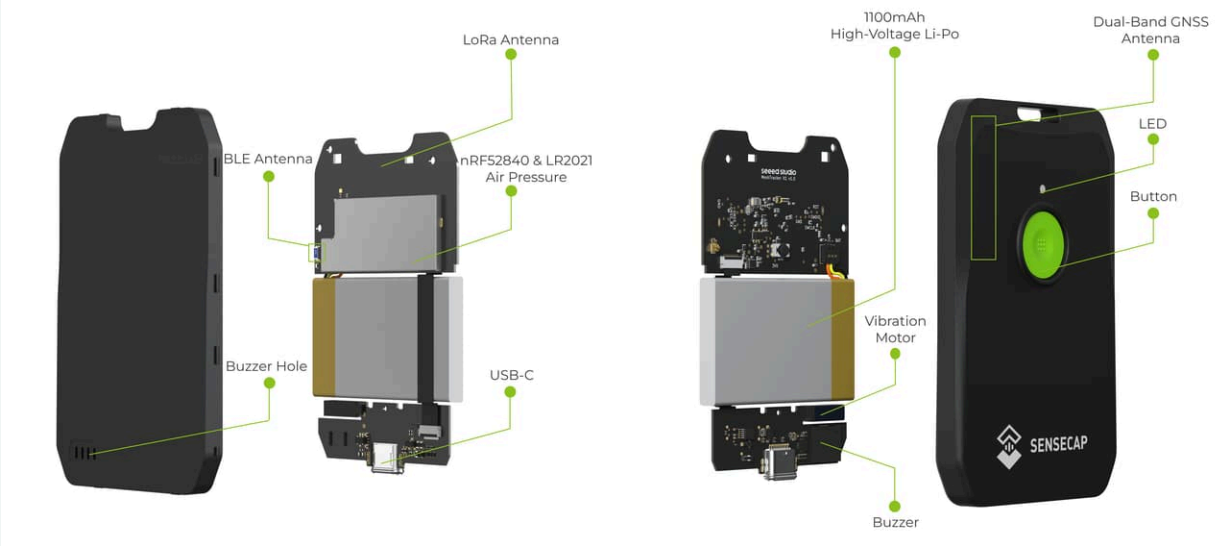

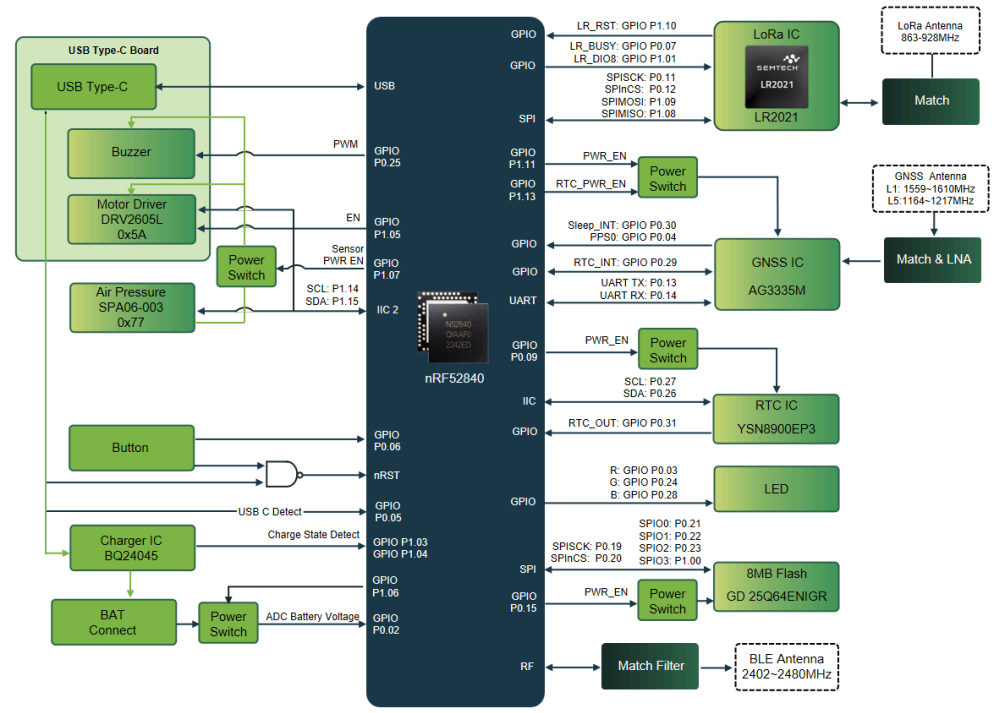

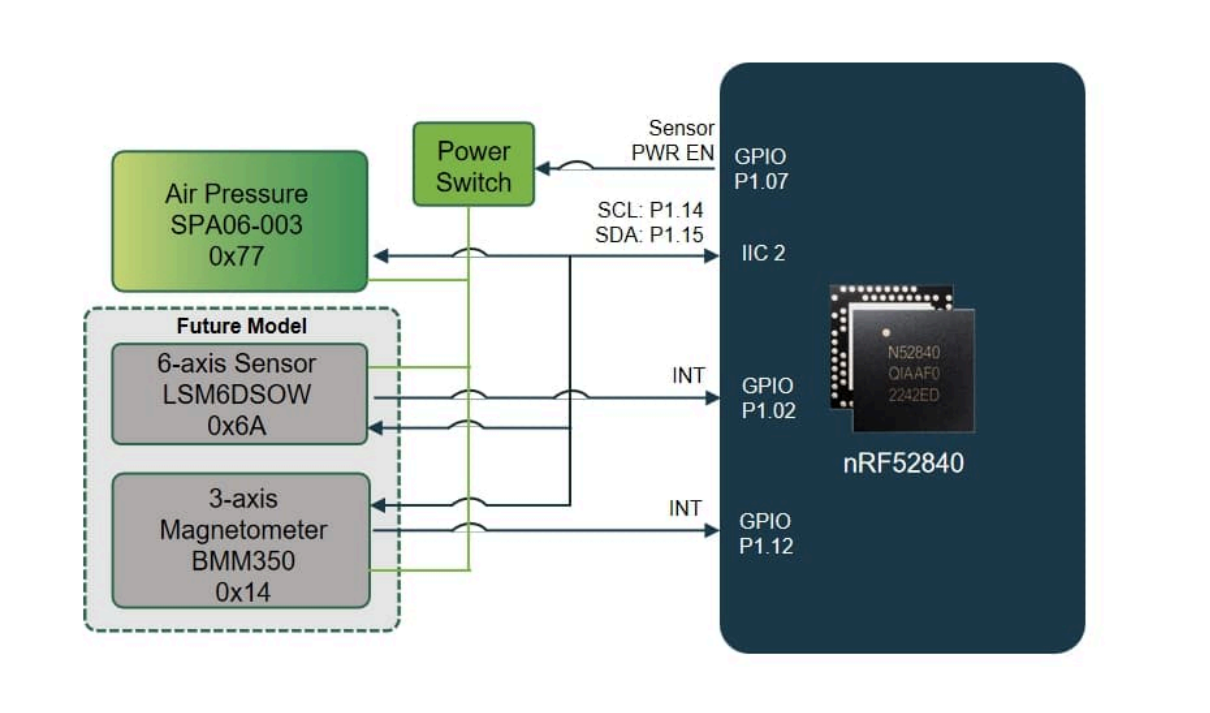

Applications

- **Hiking & Outdoor Adventures:** Stay Connected Beyond Cell Coverage Whether hiking through forests, exploring mountain trails, or backpacking into remote areas, MeshTracker X1 lets your group share locations and communicate when mobile coverage disappears.
- **Cycling & Skiing:** Track, Coordinate, and Ride Together Perfect for fast-moving outdoor activities such as cycling and skiing. Monitor team locations in real time and reconnect quickly when the group spreads out across changing terrain.
- **Festivals, Events & Races:** Never Lose Your Group in the Crowd Stay connected during music festivals, outdoor events, marathons, or large gatherings where mobile networks can become unreliable. Share real-time locations, exchange messages, and quickly regroup without relying on cellular service.
- **Safety & Emergency Preparedness:** Communication When It Matters Most When disasters disrupt traditional infrastructure or networks become unavailable, MeshTracker X1 enables off-grid communication and location sharing to support coordination, response, and community resilience.

Part List

MeshTracker X1 (with built-in battery)	x1
20cm Type-C Cable	x1
Leather Keychain	x1

Compliance & Logistics

HSCODE	8517629990
USHSCODE	8517180050
UPC	
EUHSCODE	8543709099
COO	CHINA

Resource Links

- https://www.seeedstudio.com/sensecap-meshtracker-x1-meshtastic-gps-tracker-p-6935.html
- X1_Meshtastic_Power_Consumption
- Battery Certification
- Shell 3D File

Seeed Technology Co.,Ltd.
9F, Building G3, International E City,
Zhongshanyuan Road, Nanshan, Shenzhen, China

Tel: +86 0755-80695676
Web: www.seeed.cc
Shop: www.seeedstudio.com